| SH. 1 OF 1 | CAT NO 13MC | CUSTOMER DIMENSIONS | DO NOT SEPARATE PRINT FROM WORK | LOT NO |
|---|---|---|---|---|

| OPER | TOOLS |
|---|---|
| | |

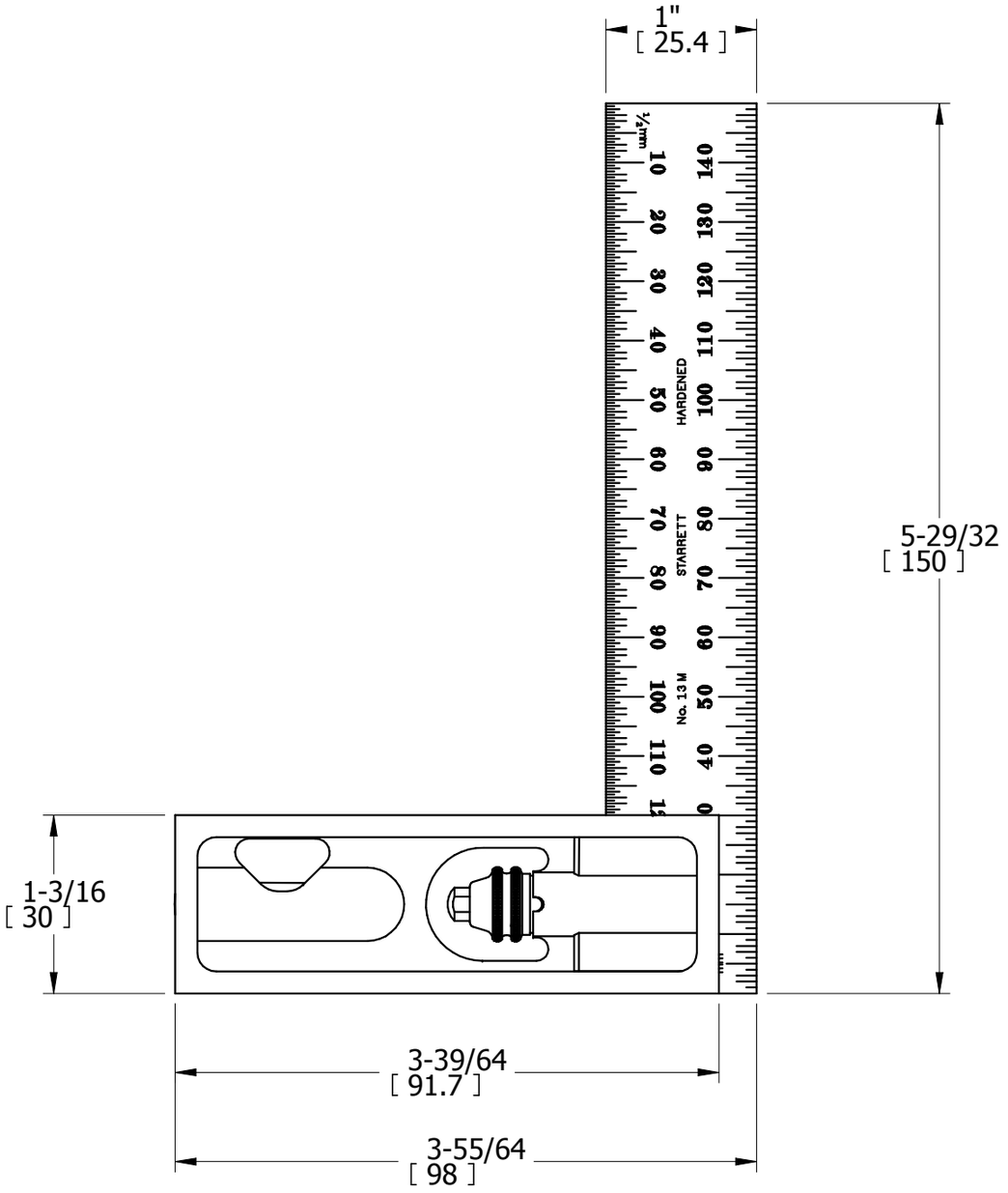


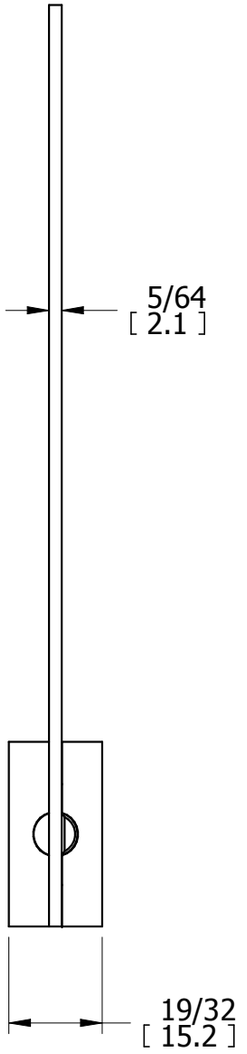


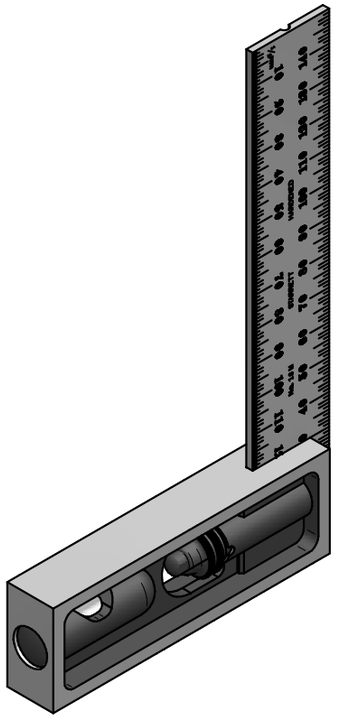

| REV | DESCRIPTION | DATE | BY |
|---|---|---|---|
| | | | |
| | | | |
| | | | |
| | | | |
| | | | |
| | | | |

| DR CHC | CHK | DATE |
|---|---|---|

DOUBLE SQUARE
150mm BLADE ONLY

FRACTIONAL TOLERANCE +- 1/64 UNLESS OTHERWISE NOTED

THE L.S. STARRETT CO.
ATHOL, MASS.