SH. 1 OF 1	CAT NO 1015A	SIZE 1/2"	DO NOT SEPARATE PRINT FROM WORK	LOT NO

OPER	TOOLS

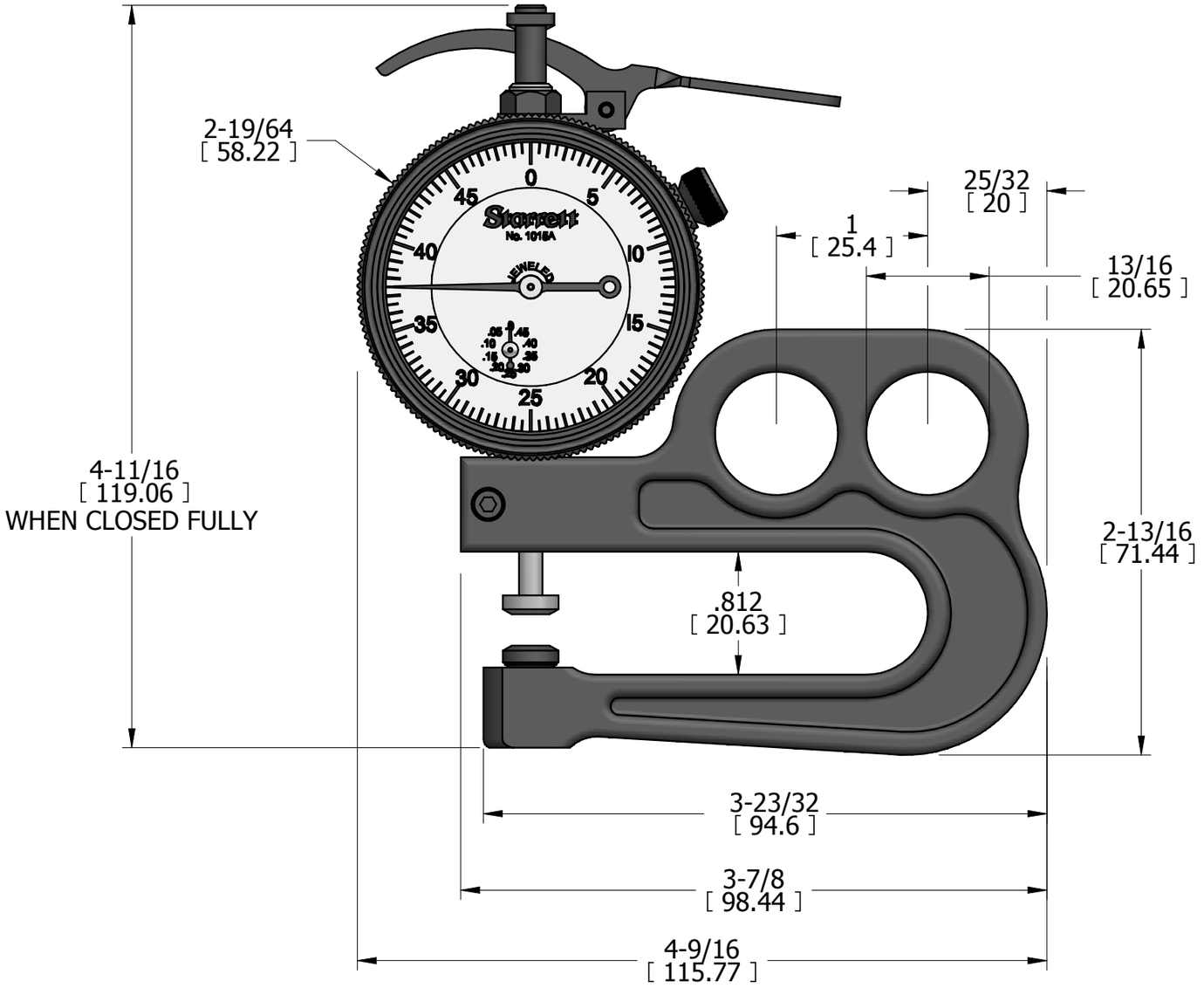

REV	DESCRIPTION	DATE	BY

DR JAC	CHK	DATE 04/08/09

PORTABLE DIAL THICKNESS GAGE

FRACTIONAL TOLERANCE +- 1/64 UNLESS OTHERWISE NOTED

THE L.S. STARRETT CO.
ATHOL, MASS.